ASTER ACADEMY

GRADUATE PROGRAMME
TECHNICAL EDUCATION

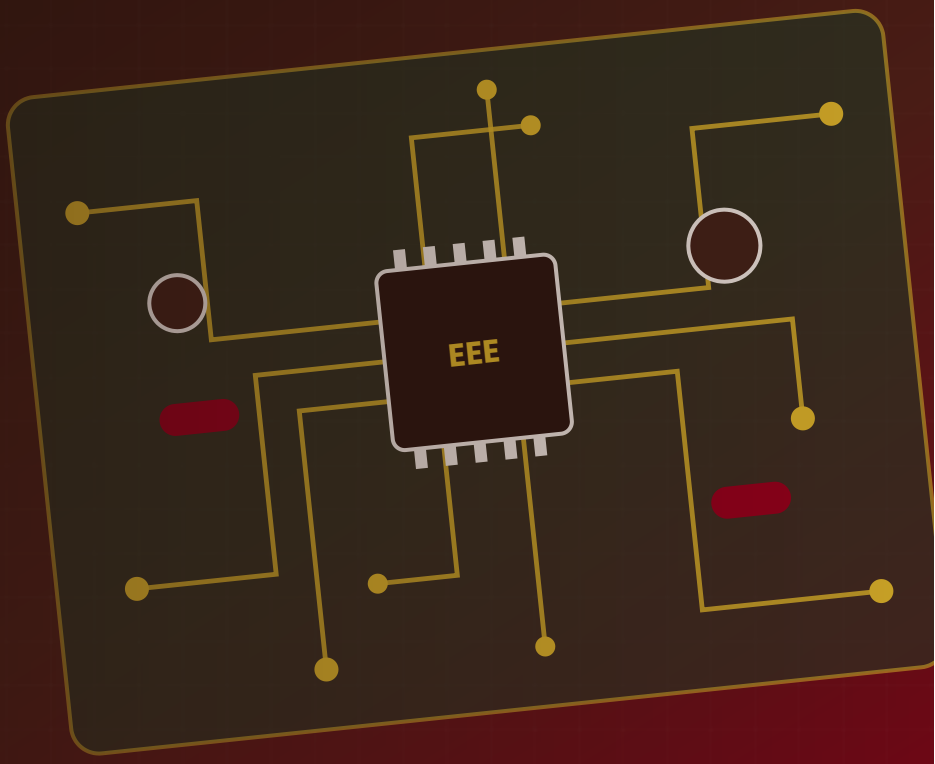

GRADUATE PROGRAM IN

Electrical & Electronics Engineering

DURATION
Regular – 3 Years

Fast Track Available

ELIGIBILITY
Plus Two / Diploma

WORK EXPERIENCE
3 Years Minimum

www.asteracademy.in
info@asteracademy.in
+91 9048 395 411

Course Description

The Graduate Program in Electrical & Electronics Engineering develops a strong foundation in how electrical energy is generated, controlled and used, and how electronic devices and circuits are designed and integrated into complex systems. The programme covers circuit analysis, electrical machines, power engineering, telecommunication systems and the manufacture and design of electrical devices.

Students also study signal processing, control systems, radio frequency design, digital electronics and microprocessors, combining theory with practical application. Graduates are ready to contribute to power, electronics, telecom and automation industries, where demand for skilled EEE professionals continues to grow.

Career Opportunities

Electrical Engineer	**Electronics Design Engineer**	**Power Systems Engineer**
Control Systems Engineer	**Telecom Engineer**	**Embedded Systems Engineer**

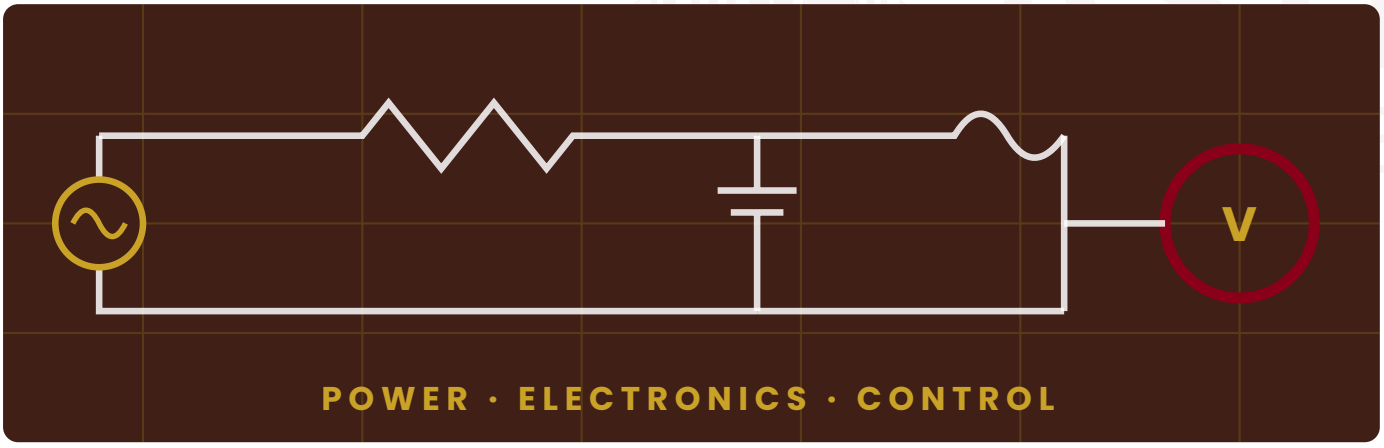

www.asteracademy.in
info@asteracademy.in
+91 9048 395 411

Our Subjects

YEAR 01

- Essentials of Management
- Electrical Engineering
- Engineering Drawings
- Devices and Circuits
- Basic Electronics

YEAR 02

- Electrical Machines
- Digital Electronics
- Circuit Analysis
- Power System Instrumentation
- Generation of Electrical Power

YEAR 03

- Electromagnetic Field Theory
- Fundamentals of Computer Applications
- Switching Theory and Logic Design
- Microprocessor and Computer Architecture
- Network Analysis and Synthesis

What You Will Gain

Circuit Design | Power Systems | Digital Electronics | Control & Automation | Microprocessors | Management Skills

www.asteracademy.in
info@asteracademy.in
+91 9048 395 411

About Us

Aster Academy is an international business school dedicated to delivering excellence in management & technical education. With a strong online learning ecosystem, we offer short-term, Diploma, Advanced Diploma, Graduate & Post Graduate programs designed for students, entrepreneurs, and working professionals. Our courses are designed by industry experts, aligned with international standards, and focused on practical skills that ensure employability and business growth.

Exam & Fees

ONLINE EXAM

2 Hours / paper

TOTAL FEES (INDIAN RESIDENTS)

Rs. 47,790*

**Terms and conditions apply.*

Enrol Today

Speak to our admissions team for batch dates and Fast Track options.

+91 9048 395 411